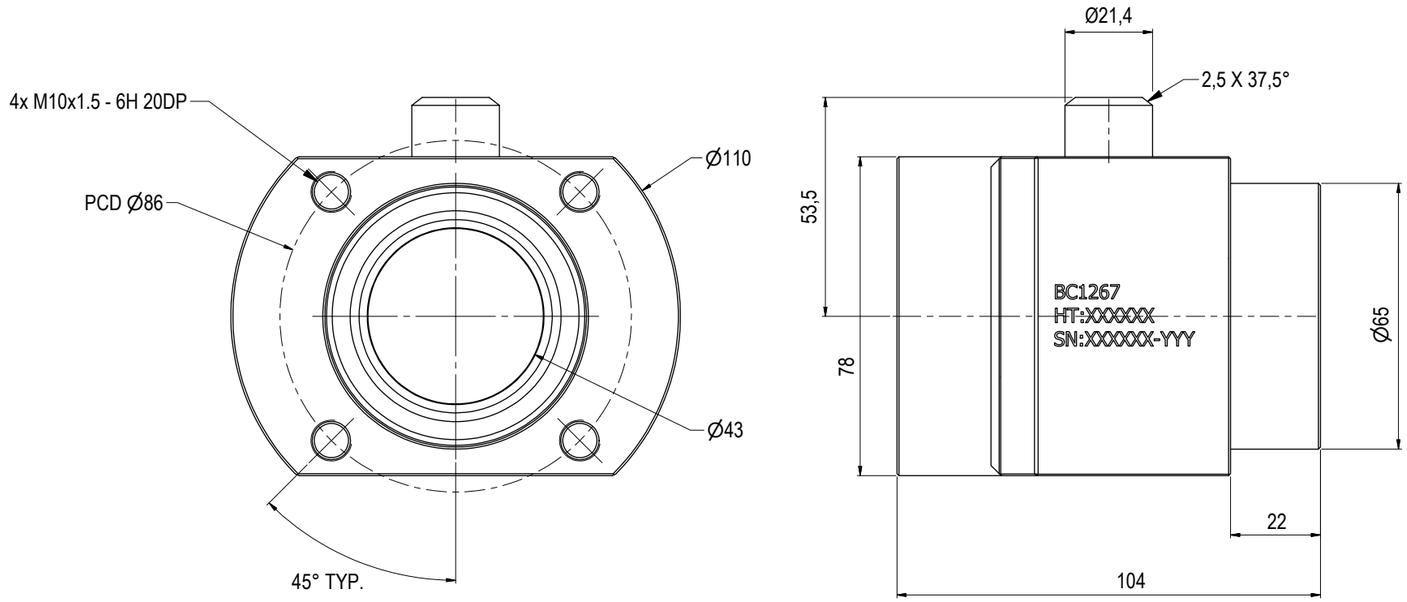

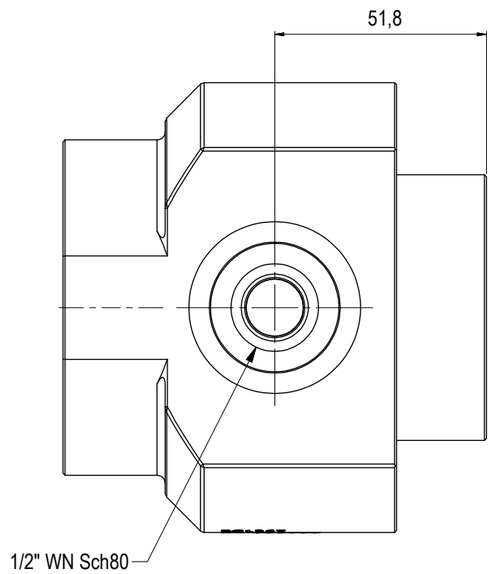

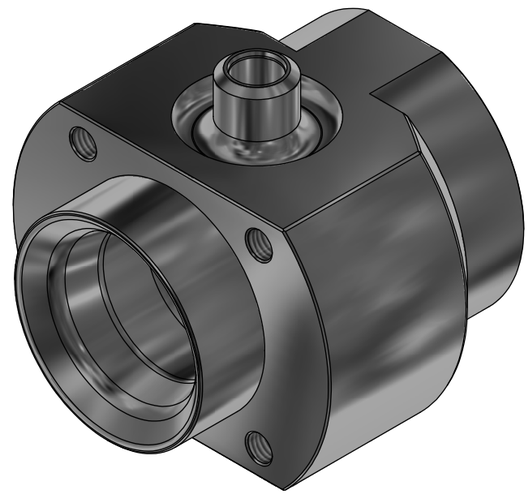

NOTE: 1
DESIGN CODE:
API 17H Type 1
API 6A

NOTE: 2
TECHNICAL CLASSIFICATION:

Article Type:	001-Hot Stabs
Main Group:	1.03. Ø43 Hot Stab
Intermediate Group:	1.2.02. Receptacle
Sub Group:	1.2.6.01. Single

NOTE: 3
INTERFACE INFORMATION:

Pressure Rating Bar:	690
Material:	S32750 SUPER DUPLEX
Weight:	3,6 kg
Volume:	0,46 dm^3
Surface Area:	586 cm^2
Hydraulic:	1/2" WN Sch80
Mechanical:	4xM10@PCD 86
Electrical:	N/A
Com. & Protocol:	N/A

Rev.	Date	Reason for issue	Revision change	Made	Chk'd	Appr.
01	7.6.2024	9-IFU (Issued for Use)		HNJ	TAN	HNJ

BLUE LOGIC

Unless Noted Otherwise:	Dwg Scale: NTS	Drawing title: Ø43 SP Rec 10k Long-term WN 1/2" Sch80	
Dim. Tol: NS-ISO 2768-1	Dwg Proj:		
Roughness: Ra	Dwg Format: A3		
Fillet Rad: Corner Rmax:	Break Edges: (R. Alt. 45°) R= 0,1-0,5	Drawing number: BC1267	Rev. 01